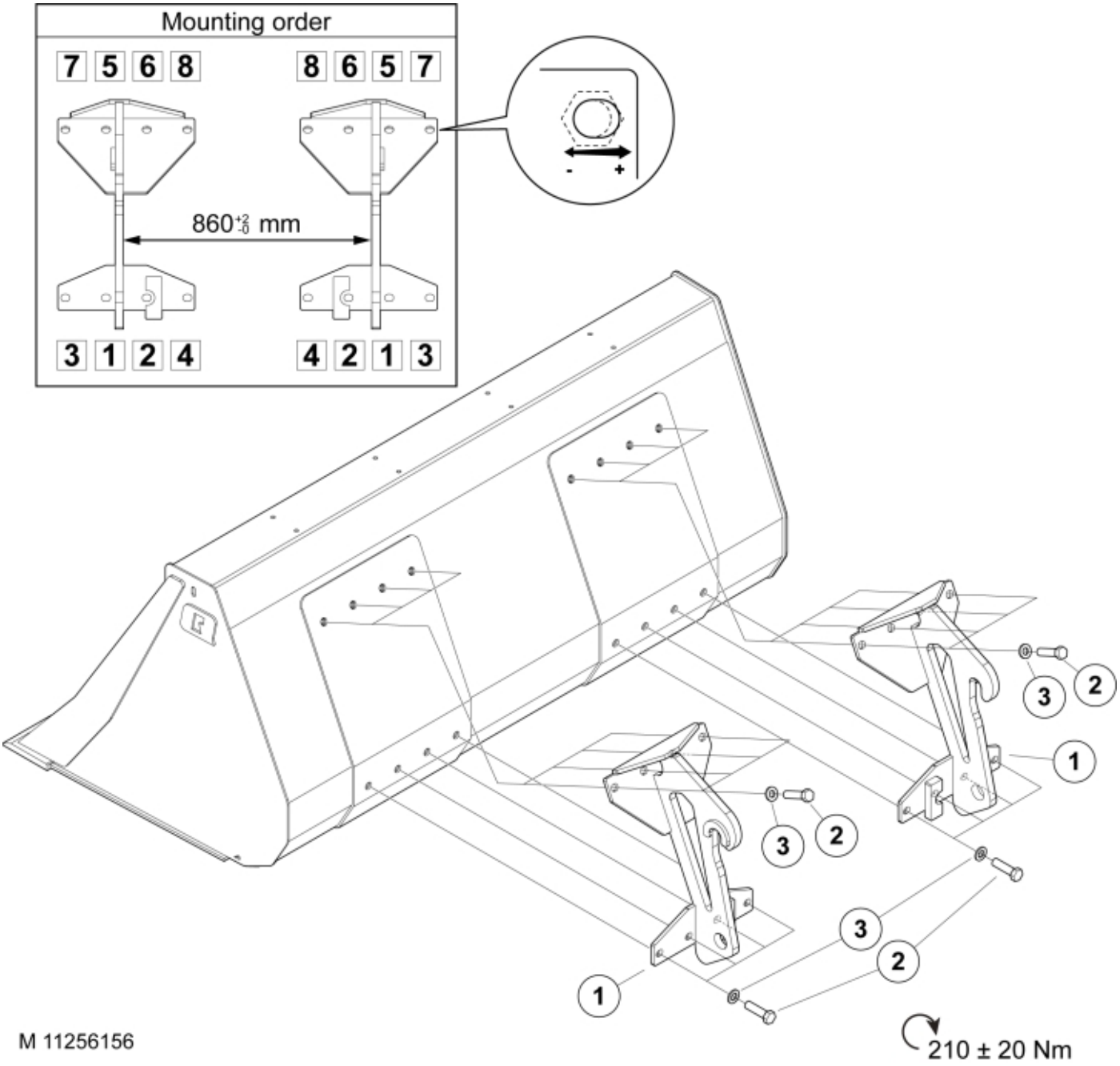
Mounting order
7 5 6 8
8 6 5 7
860 +2 -0 mm
3 1 2 4
4 2 1 3
-
+
3
2
1
3
2
3
2
1
M 11256156
210 ± 20 Nm

© 2025 Jost

Part assemblies Attachment kit Zettelmeyer 602 / Schäffer VL

PartNo	Pos	Qty	Name	Specifications
11256156		1	Attachment kit Zettelmeyer 602 / Schäffer VL	
60073252	1	1	Attachment Zettelmeyer 602 / Schäffer VL	
60047988		2	Bolt kit	M16
5002153	2	8	• Screw	M6S M16 x 45
5051493	3	8	• Washer	M16

© 2025 Jost