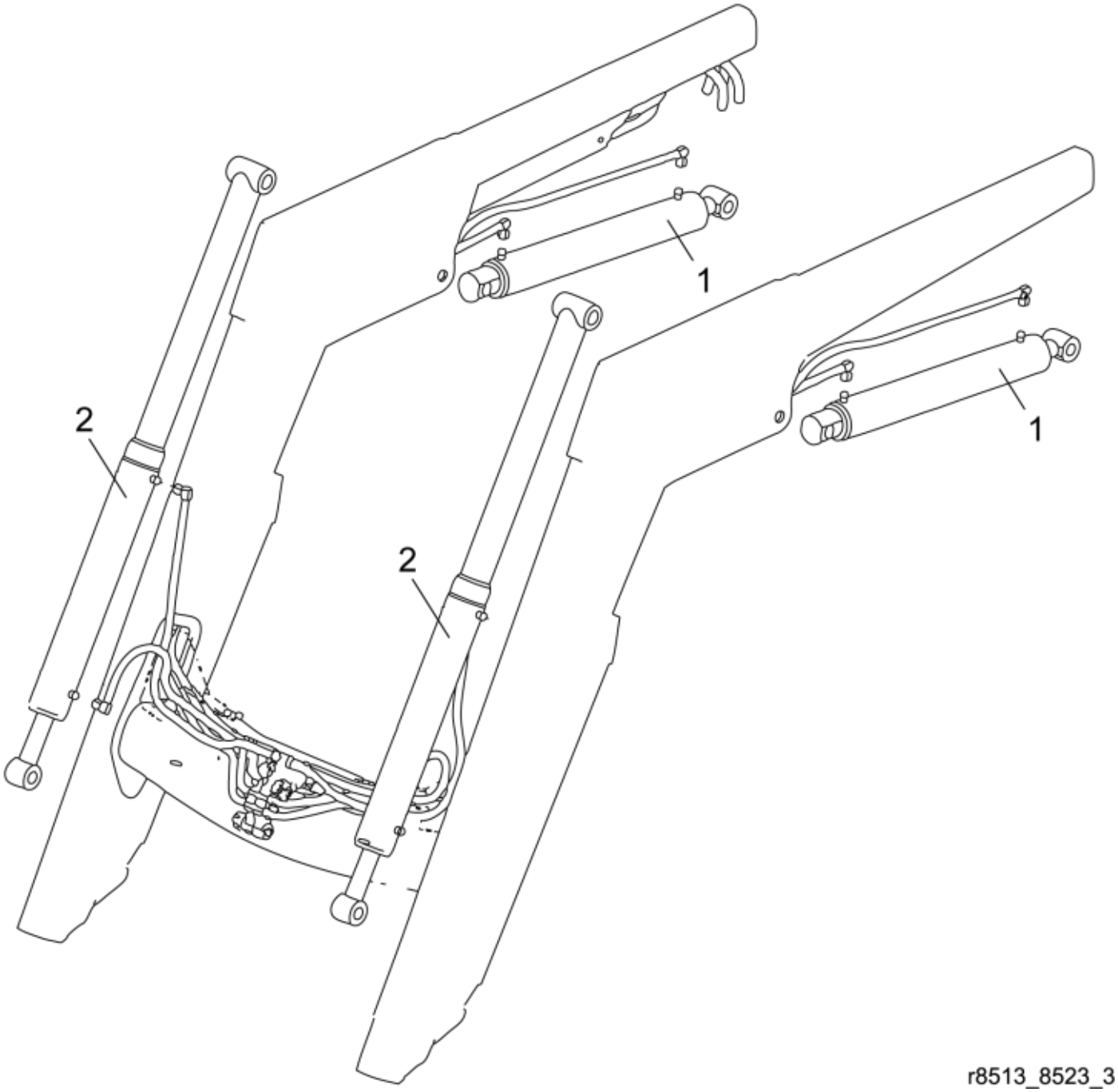


r8513_8523_3


© 2021 Ålö

**Part assemblies** Cylinder

Cylinder part number is written on the cylinder itself. Have a look before searching for parts.

| PartNo | Pos | Qty | Name | Specification |
|---|---|---|---|---|
| 12711810-1 | 1 | 2 | Cylinder | Alo Black |
| 12720310-1 | 2 | 2 PCS | Cylinder | Alo Black |


© 2021 Ålö